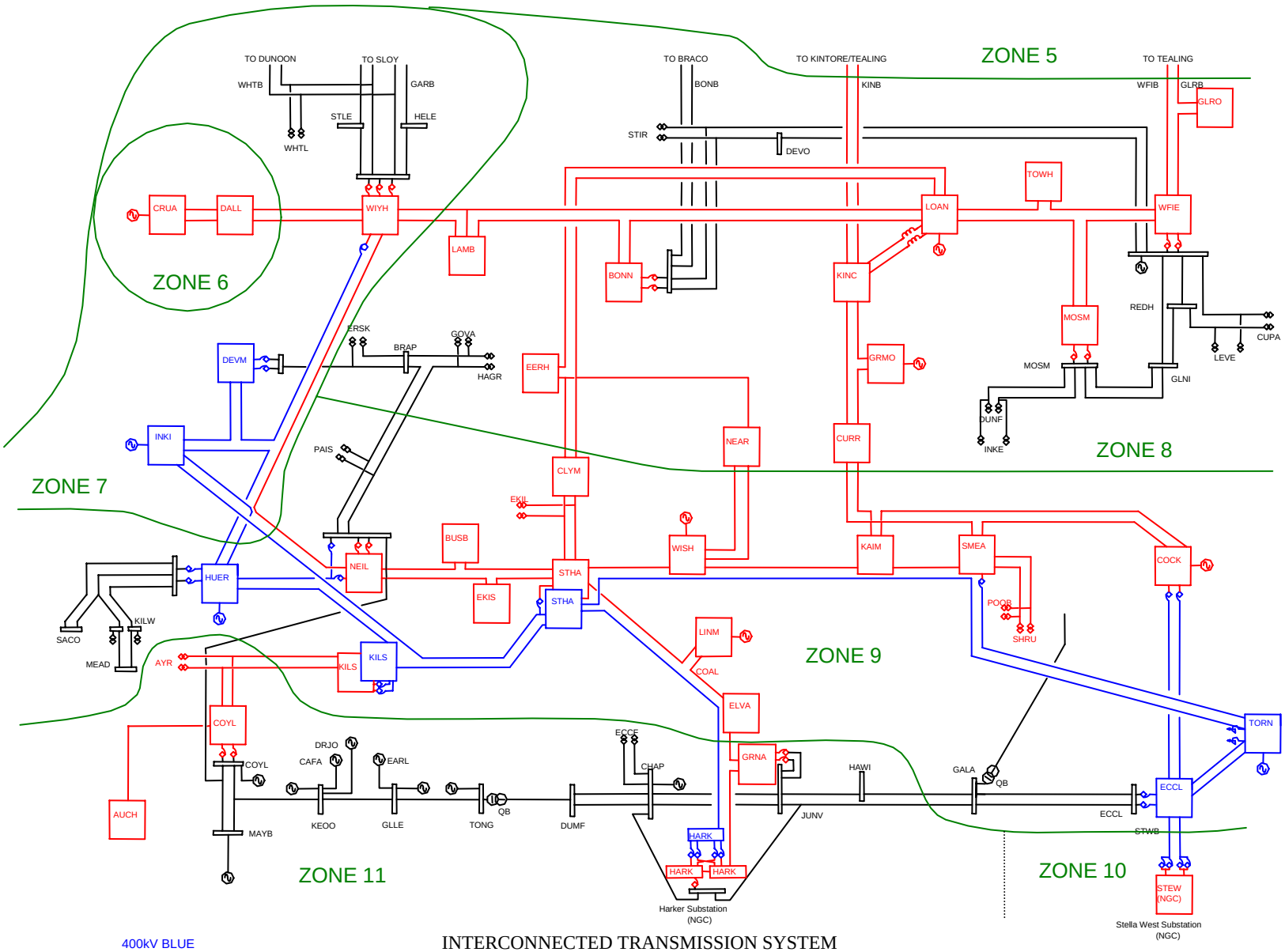

INTERCONNECTED TRANSMISSION SYSTEM
SPT Generation Use of System Tariff Zones (Electrical), April 2006

Figure A.3.2